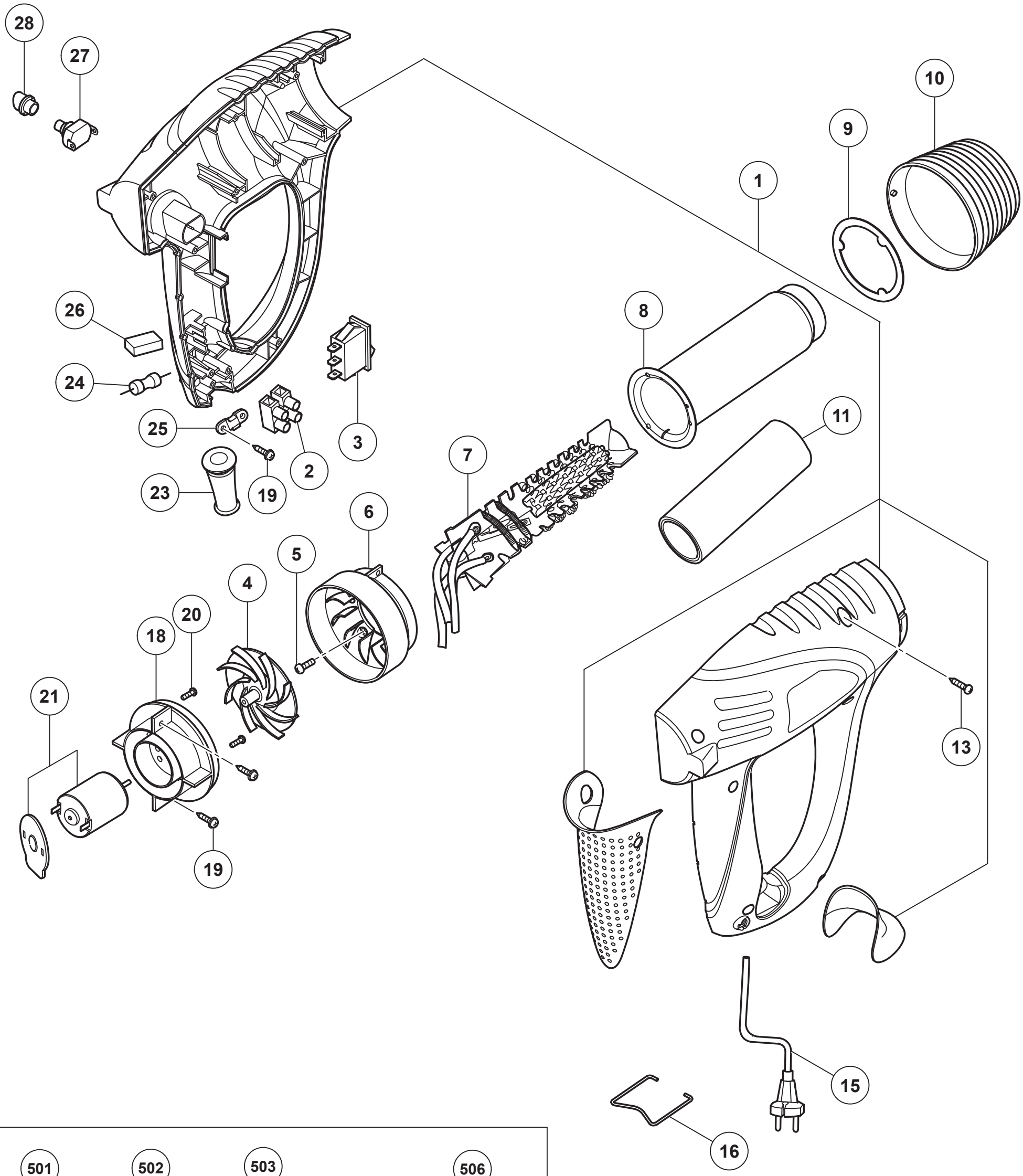

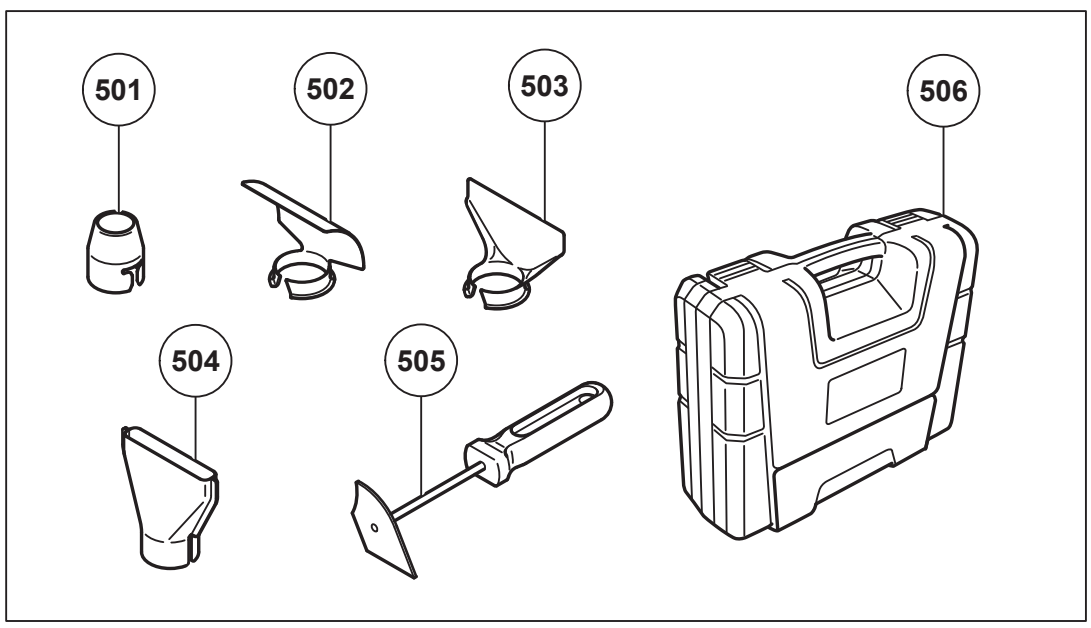

MODEL
RH600T

Rev.1

HiKOKI

HEAT GUN RH600T

Item No.	Code No.	Description	No. Used	Remarks
1	335350	HOUSING (A).(B) SET	1	
2	335352	TERMINAL	1	
3	335363	SWITCH	1	
4	335364	FAN	1	
5	335365	MACHINE SCREW M3X10	3	
6	335366	FAN COVER	1	
7	337142	HEATER	1	
8	335357	HEATER COVER	1	
9	335348	SUPPORT RING	1	
10	335356	FRONT COVER	1	
11	335349	MICA LINER	1	
13	335351	TAPPING SCREW D3X16	6	
*15	337146	CORD	1	
16	335360	HOLDER SUPPORT	1	
18	335353	MOTOR SUPPORT	1	
19	335354	TAPPING SCREW (W/FLANGE) D3X15	4	
20	335355	MACHINE SCREW M2.5X4	2	
21	336607	MOTOR PCB	1	
23	337157	CORD ARMOR	1	
24	336367	RESISTANCE	1	
25	335359	CORD CLIP	1	
26	337158	CAPACITOR (A)	1	
27	335361	PUSHING SWITCH	1	
28	335362	SWITCH BUTTON	1	
		STANDARD ACCESSORIES		
*501	336191	NOZZLE (ROUND)	1	EXCEPT FOR IND
*502	336192	NOZZLE (CORVED SURFACE)	1	EXCEPT FOR IND
*503	336193	NOZZLE (GLASS PROTECTOR)	1	EXCEPT FOR IND
*504	336194	NOZZLE (PLANE)	1	EXCEPT FOR IND
*505	336195	SCRAPER	1	EXCEPT FOR IND
*506	337218	CASE (A)	1	EXCEPT FOR IND

* ALTERNATIVE PARTS